NEC

AccuSync AS242W

User's Manual

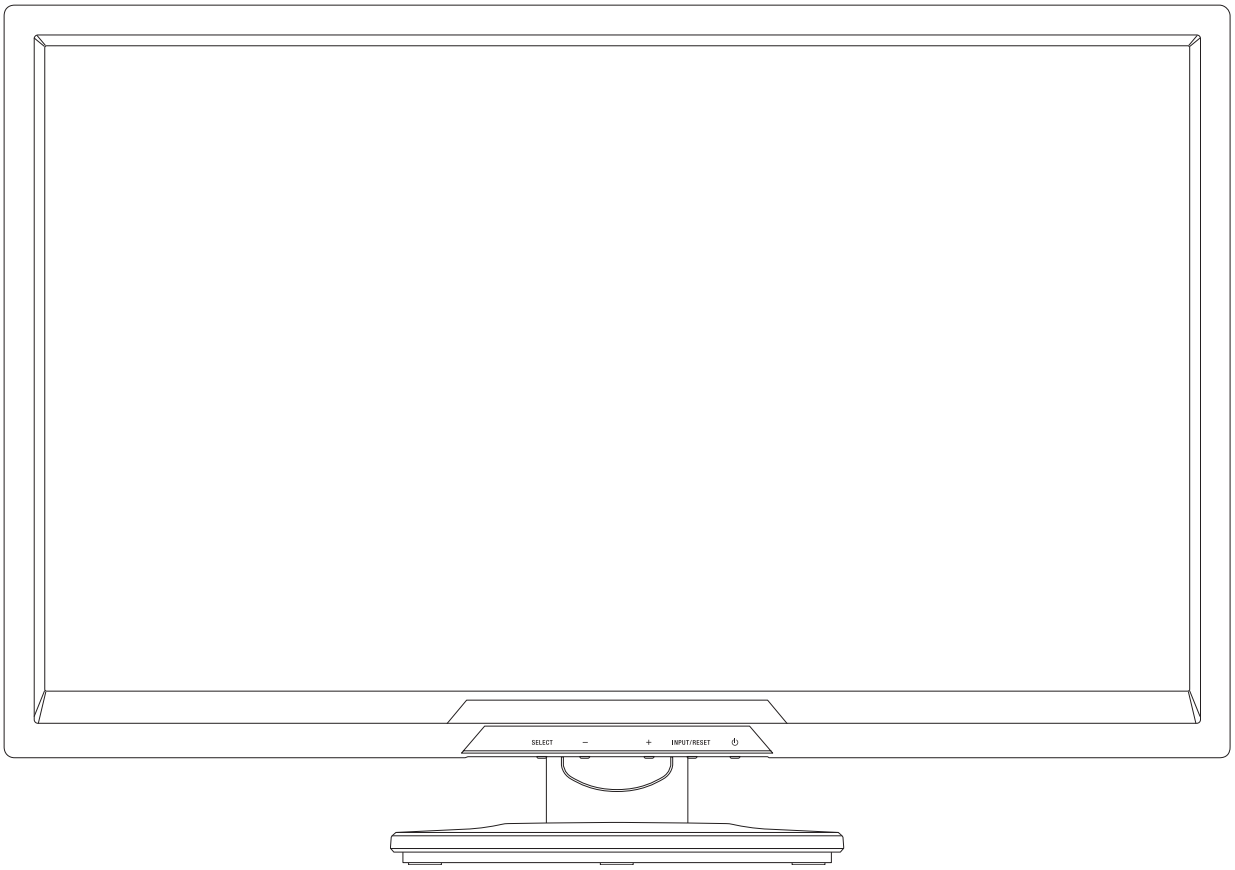

Index

Warning, Caution.....English-1
Registration Information.....English-2
Recommended use.....English-4
Contents.....English-6
Quick Start.....English-7
Controls.....English-9
Specifications.....English-12
Features.....English-13
Troubleshooting.....English-14
TCO Certified Displays 6.....English-15
Manufacturer’s Recycling and Energy Information.....English-16

WARNING

TO PREVENT FIRE OR SHOCK HAZARDS, DO NOT EXPOSE THIS UNIT TO RAIN OR MOISTURE. ALSO, DO NOT USE THIS UNIT'S POLARIZED PLUG WITH AN EXTENSION CORD RECEPTACLE OR OTHER OUTLETS UNLESS THE PRONGS CAN BE FULLY INSERTED.

REFRAIN FROM OPENING THE CABINET AS THERE ARE HIGH VOLTAGE COMPONENTS INSIDE. REFER SERVICING TO QUALIFIED SERVICE PERSONNEL.

CAUTION

CAUTION: TO REDUCE THE RISK OF ELECTRIC SHOCK, MAKE SURE POWER CORD IS UNPLUGGED FROM WALL SOCKET. TO FULLY DISENGAGE THE POWER TO THE UNIT, PLEASE DISCONNECT THE POWER CORD FROM THE AC OUTLET.DO NOT REMOVE COVER (OR BACK). NO USER SERVICEABLE PARTS INSIDE. REFER SERVICING TO QUALIFIED SERVICE PERSONNEL.

This symbol warns user that uninsulated voltage within the unit may have sufficient magnitude to cause electric shock. Therefore, it is dangerous to make any kind of contact with any part inside this unit.

This symbol alerts the user that important literature concerning the operation and maintenance of this unit has been included. Therefore, it should be read carefully in order to avoid any problems.

CAUTION: Please use the power cord provided with this display in accordance with the table below. If a power cord is not supplied with this equipment, please contact your supplier. For all other cases, please use a power cord that matches the AC voltage of the power outlet and has been approved by and complies with the safety standard of your particular country.

Plug Type	North America	European Continental	U.K.	Chinese	Japanese
Plug Shape	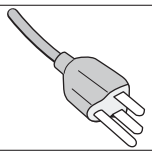	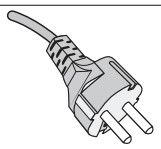	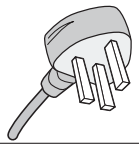	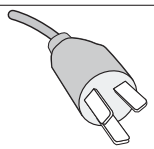	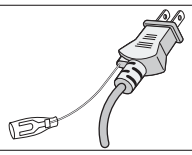
Country	U.S.A./Canada	EU (except U.K.)	U.K.	China	Japan
Voltage	120*	230	230	220	100

*When operating the monitor with its AC 125-240V power supply, use a power supply cord that matches the power supply voltage of the AC power outlet being used.

NOTE: This product can only be serviced in the country where it was purchased.

Registration Information

FCC Information

1. Use the attached specified cables with the AccuSync AS242W (L244QZ) color monitor so as not to interfere with radio and television reception.

   (1) The power supply cord you use must have been approved by and comply with the safety standards of U.S.A., and meet the following condition.

Power supply cord Length Plug shape	Non shield type, 3-conductor 1.5 m 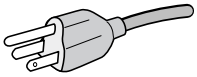 U.S.A

   (2) Please use the supplied shielded video signal cable.
   Use of other cables and adapters may cause interference with radio and television reception.

2. This equipment has been tested and found to comply with the limits for a Class B digital device, pursuant to part 15 of the FCC Rules. These limits are designed to provide reasonable protection against harmful interference in a residential installation. This equipment generates, uses, and can radiate radio frequency energy, and, if not installed and used in accordance with the instructions, may cause harmful interference to radio communications. However, there is no guarantee that interference will not occur in a particular installation. If this equipment does cause harmful interference to radio or television reception, which can be determined by turning the equipment off and on, the user is encouraged to try to correct the interference by one or more of the following measures:

   - Reorient or relocate the receiving antenna.
   - Increase the separation between the equipment and receiver.
   - Connect the equipment into an outlet on a circuit different from that to which the receiver is connected.
   - Consult your dealer or an experienced radio/TV technician for help.

   If necessary, the user should contact the dealer or an experienced radio/television technician for additional suggestions. The user may find the following booklet, prepared by the Federal Communications Commission, helpful: “How to Identify and Resolve Radio-TV Interference Problems.” This booklet is available from the U.S. Government Printing Office, Washington, D.C., 20402, Stock No. 004-000-00345-4.

Declaration of Conformity

This device complies with Part 15 of FCC Rules. Operation is subject to the following two conditions. (1) This device may not cause harmful interference, and (2) this device must accept any interference received, including interference that may cause undesired operation.

U.S. Responsible Party:	**NEC Display Solutions of America, Inc.**
Address:	**500 Park Boulevard, Suite 1100** **Itasca, Illinois 60143**
Tel. No.:	**(630) 467-3000**

Type of Product:	Display Monitor
Equipment Classification:	Class B Peripheral
Model:	AccuSync AS242W (L244QZ)

We hereby declare that the equipment specified above conforms to the technical standards as specified in the FCC Rules.

- The intended primary use of this product is as an Information Technical Equipment in an office or domestic environment.
- The product is intended to be connected to a computer and is not intended for the display of television broadcast signals.

Windows is a registered trademark of Microsoft Corporation. NEC is a registered trademark of NEC Corporation.
ErgoDesign is a registered trademark of NEC Display Solutions, Ltd. in Austria, Benelux, Denmark, France, Germany, Italy, Norway, Spain, Sweden, U.K.
All other brands and product names are trademarks or registered trademarks of their respective owners.

ENERGY STAR is a U.S. registered trademark.
As an ENERGY STAR® Partner, NEC Display Solutions of America, Inc. has determined that this product meets the ENERGY STAR guidelines for energy efficiency. The ENERGY STAR emblem does not represent EPA endorsement of any product or service.

Recommended use

Safety Precautions and Maintenance

FOR OPTIMUM PERFORMANCE, PLEASE NOTE
THE FOLLOWING WHEN SETTING UP AND
USING THE LCD COLOR MONITOR:

- **DO NOT OPEN THE MONITOR.** There are no user serviceable parts inside and opening or removing covers may expose you to dangerous shock hazards or other risks. Refer all servicing to qualified service personnel.
- Do not spill any liquids into the cabinet or use your monitor near water.
- Do not insert objects of any kind into the cabinet slots, as they may touch dangerous voltage points, which can be harmful or fatal or may cause electric shock, fire or equipment failure.
- Do not place any heavy objects on the power cord. Damage to the cord may cause shock or fire.
- Do not place this product on a sloping or unstable cart, stand or table, as the monitor may fall, causing serious damage to the monitor.
- The power supply cord you use must have been approved by and comply with the safety standards of your country. (Type H05VV-F 3G 0.75 mm^2 should be used in Europe).
- In UK, use a BS-approved power cord with molded plug having a black (5A) fuse installed for use with this monitor.
- Do not place any objects onto the monitor and do not use the monitor outdoors.
- Do not bend power cord.
- Do not use monitor in high temperatured, humid, dusty, or oily areas.
- Do not cover vent on monitor.
- Vibration can damage the backlight. Do not install where the monitor will be exposed to continual vibration.
- If monitor or glass is broken, do not come in contact with the liquid crystal and handle with care.
- To prevent damage to the LCD monitor caused by tipping over due to earthquakes or other shocks, make sure to install the monitor in a stable location and take measures to prevent falling.

Immediately turn off the power, unplug your monitor from the wall outlet and move to a safe location then refer servicing to qualified service personnel under the following conditions. If the monitor is used in this condition, the monitor may cause fall, fire and electric shock:

- If the monitor stand has been cracked or peeled.
- If the monitor has been wobbled.
- If the monitor has an unusual odor.
- When the power supply cord or plug is damaged.
- If liquid has been spilled, or objects have fallen into the monitor.
- If the monitor has been exposed to rain or water.
- If the monitor has been dropped or the cabinet damaged.
- If the monitor does not operate normally by following operating instructions.

CAUTION

- Allow adequate ventilation around the monitor so that heat can properly dissipate. Do not block ventilated openings or place the monitor near a radiator or other heat sources. Do not put anything on top of monitor.
- The power cable connector is the primary means of detaching the system from the power supply. The monitor should be installed close to a power outlet which is easily accessible.
- Handle with care when transporting. Save packaging for transporting.
- Do not touch LCD panel surface while transporting, mounting and setting. Applying pressure on the LCD panel can cause serious damage.

Image Persistence: Image persistence is when a residual or “ghost” image of a previous image remains visible on the screen. Unlike CRT monitors, LCD monitors’ image persistence is not permanent, but constant images being displayed for a long period of time should be avoided.

To alleviate image persistence, turn off the monitor for as long as the previous image was displayed. For example, if an image was on the monitor for one hour and a residual image remains, the monitor should be turned off for one hour to erase the image.

NOTE: As with all personal display devices, NEC DISPLAY SOLUTIONS recommends using a moving screen saver at regular intervals whenever the screen is idle or turning off the monitor when not in use.

CORRECT PLACEMENT AND ADJUSTMENT OF THE MONITOR CAN REDUCE EYE, SHOULDER AND NECK FATIGUE. CHECK THE FOLLOWING WHEN YOU POSITION THE MONITOR:

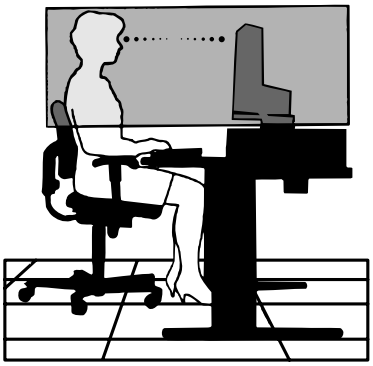

- For optimum performance, allow 20 minutes for the display to warm up.
- Adjust the monitor height so that the top of the screen is at or slightly below eye level. Your eyes should look slightly downward when viewing the middle of the screen.
- Position your monitor no closer than 40 cm (15.75 inches) and no further away than 70 cm (27.56 inches) from your eyes. The optimal distance is 50 cm (19.69 inches).
- Rest your eyes periodically by focusing on an object at least 20 feet away. Blink often.
- Position the monitor at a 90° angle to windows and other light sources to minimize glare and reflections. Adjust the monitor tilt so that ceiling lights do not reflect on your screen.
- If reflected light makes it hard for you to see your screen, use an anti-glare filter.
- Clean the LCD monitor surface with a lint-free, non-abrasive cloth. Avoid using any cleaning solution or glass cleaner!
- Adjust the monitor's brightness and contrast controls to enhance readability.
- Use a document holder placed close to the screen.
- Position whatever you are looking at most of the time (the screen or reference material) directly in front of you to minimize turning your head while you are typing.
- Avoid displaying fixed patterns on the monitor for long periods of time to avoid image persistence (after-image effects).
- Get regular eye checkups.

Ergonomics

To realize the maximum ergonomics benefits, we recommend the following:

- To avoid eye fatigue, adjust the brightness to a moderate setting. Place a sheet of white paper next to the LCD screen for luminance reference.
- Do not position the Contrast control to its maximum setting.
- Use the preset Size and Position controls with standard signals.
- Use the preset Color Setting.
- Use non-interlaced signals with a vertical refresh rate of between 56.0-76.0 Hz.
- Do not use primary color blue on a dark background, as it is difficult to see and may produce eye fatigue due to insufficient contrast.

Cleaning the LCD Panel

- When the LCD is dusty, please gently wipe with a soft cloth.
- Please do not rub the LCD panel with hard or coarse material.
- Please do not apply pressure to the LCD surface.
- Please do not use OA cleaner as it will cause deterioration or discoloration on the LCD surface.

Cleaning the Cabinet

- Unplug the power supply
- Gently wipe the cabinet with a soft cloth
- To clean the cabinet, dampen the cloth with a neutral detergent and water, wipe the cabinet and follow with a dry cloth.

NOTE: Many plastics are used on the surface of the cabinet. DO NOT clean with benzene, thinner, alkaline detergent, alcoholic system detergent, glass cleaner, wax, polish cleaner, soap powder, or insecticide. Do not touch rubber or vinyl to the cabinet for a long time. These types of fluids and fabrics can cause the paint to deteriorate, crack or peel.

For more detailed information on setting up a healthy work environment, write to the American National Standard for Human Factors Engineering of Computer Workstations - ANSI/HFES 100-2007 - The Human Factors Society, Inc. P.O. Box 1369, Santa Monica, California 90406.

Contents

Your new NEC monitor box* should contain the following:

- AccuSync monitor
- Power Cord
- Video Signal Cable (Mini D-SUB 15 pin to Mini D-SUB 15 pin)
- Base Stand
- Stand Neck
- Setup Manual

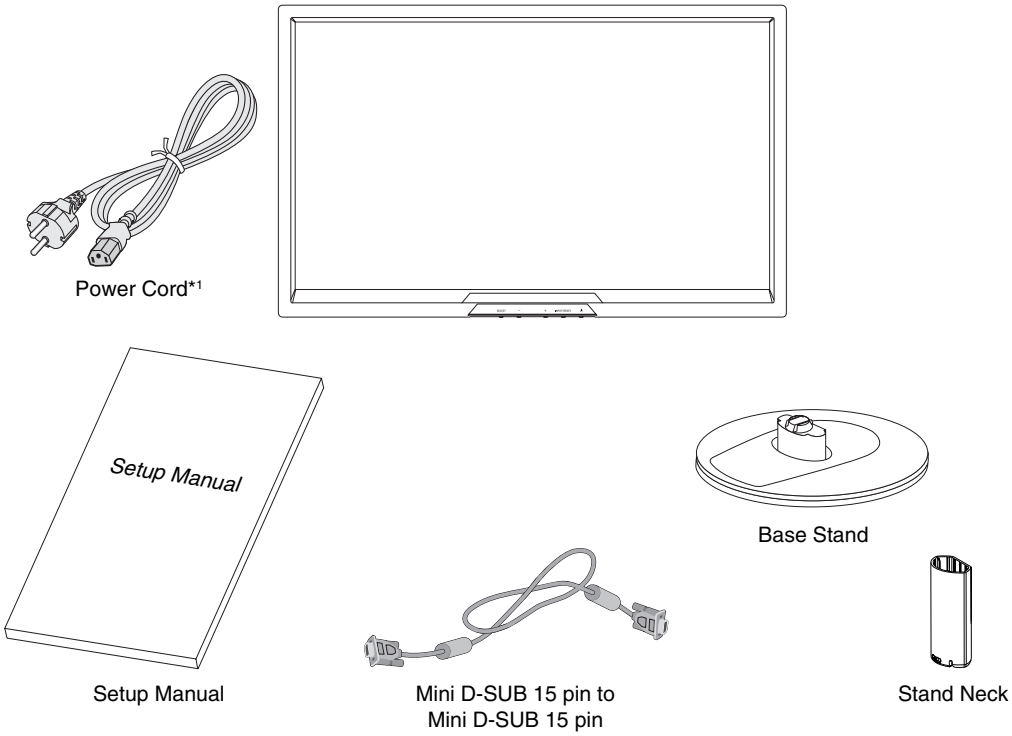

* *Remember to save your original box and packing material to transport or ship the monitor.*

*1 Type and number of power cords included will depend on the where the LCD monitor is to be shipped. When more than one power cord is included, please use a power cord that matches the AC voltage of the power outlet and has been approved by and complies with the safety standard of your particular country.

Quick Start

To attach the stand neck and base stand to the LCD stand:

1. Attach the stand neck to the monitor. And then, attach the base stand to the stand. The locking tabs on the base stand should fit into the hole on the stand neck (**Figure 1**).

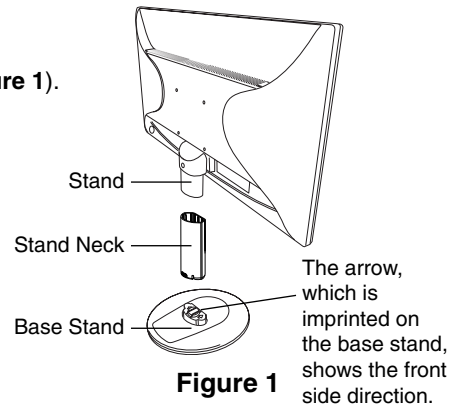

Figure 1

To connect the LCD monitor to your system, follow these instructions:

1. Turn off the power to your computer.
2. **For a PC or MAC with DVI digital output:** Connect the DVI signal cable (not included) to the connector of the display card in your system (**Figure A.1**). Tighten all screws.

   For a PC with Analog output: Connect a 15-pin mini D-SUB signal cable to the connector of the display card in your system (**Figure A.2**).

   For a MAC: Connect a Macintosh cable adapter (not included) to the computer, then attach the 15-pin mini D-SUB signal cable to the Macintosh cable adapter (**Figure A.3**).

NOTE: Some Macintosh systems do not require a Macintosh cable adapter.

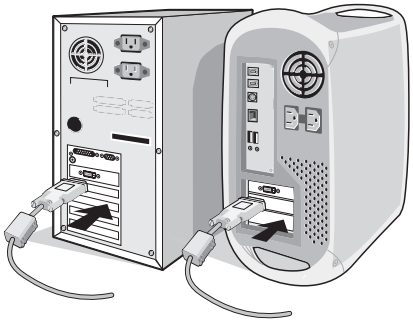

Figure A.1

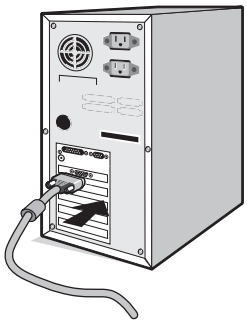

Figure A.2

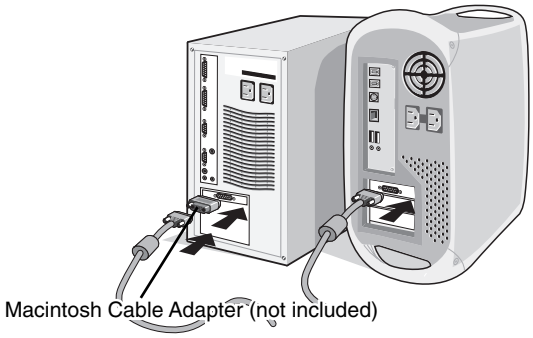

Figure A.3

3. Connect all cables to the appropriate connectors (**Figure C.1**).

NOTE: Incorrect cable connections may result in irregular operation, damage display quality/components of LCD module and/or shorten the module's life.

4. Connect one end of the power cord to the AC inlet on the back of the monitor and the other end to the power outlet.

NOTE: Please refer to Caution section of this manual for proper selection of AC power cord.

5. Turn on the monitor with the front power button (**Figure E.1**) and the computer.
6. No-touch auto adjust automatically adjusts the monitor to optimal settings upon initial setup for most timings. For further adjustments, use the following OSD controls:
   - Auto Contrast (Analog input only)
   - Auto Adjust (Analog input only)

   Refer to the **Controls** section of this User's Manual for a full description of these OSD controls.

NOTE: If you have any problems, please refer to the **Troubleshooting** section of this User's Manual.

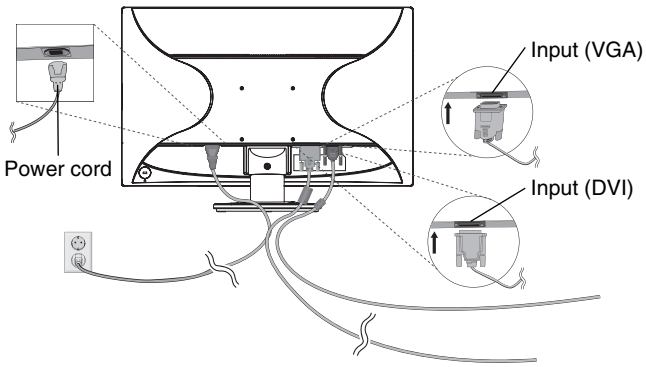

Figure C.1

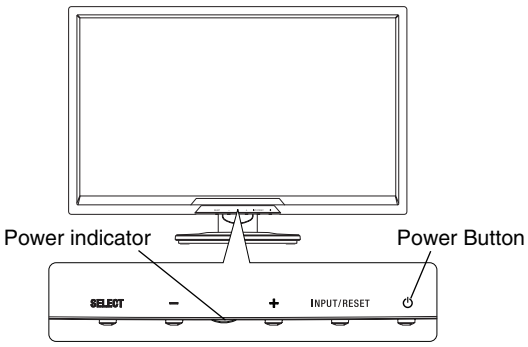

Figure E.1

Tilt

Grasp top and bottom sides of the monitor screen with your hands and adjust the tilt as desired (**Figure TS.1**).

NOTE: Handle with care when tilting the monitor screen.

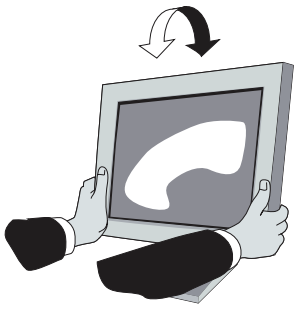

Figure TS.1

Repacking

Remove base stand and stand neck for repacking.

1. Disconnect all cables.
2. Place monitor face down on a non-abrasive surface.
3. Remove base stand. Move up tabs and take off the base stand (**Figure S.1**).
4. Remove stand neck. Push down 2 tabs and remove stand neck (**Figure S.2**).

NOTE: Handle with care when removing base stand and stand neck. If you have difficulty removing the base stand, please move base stand left and right in small motion.

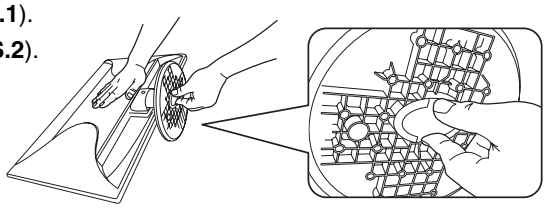

Figure S.1

Flexible Arm Installation

This LCD monitor is designed for use with a flexible arm.

To prepare the monitor for alternate mounting purposes:

- Follow the instructions provided by the manufacturer of the display mount.
- To meet the safety requirements, the monitor must be mounted to an arm that supports the weight of the monitor and be UL-certified. See page 12 for details. Remove the base stand before mounting.

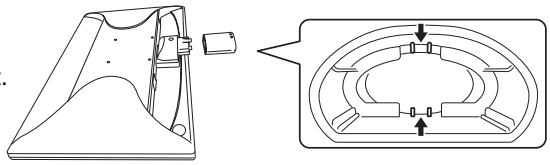

Figure S.2

Remove Base Stand for Mounting

To prepare the monitor for alternate mounting purposes:

1. Disconnect all cables.
2. Place monitor face down on a non-abrasive surface.
3. Move up tabs and take off the base stand (**Figure S.1**). The monitor can now be mounted using an alternate method. Reverse process to reattach stand.

NOTE: Handle with care when removing monitor stand. If you have difficulty removing the base stand, please move base stand left and right in small motion. Do not remove stand neck when you use mounting method.

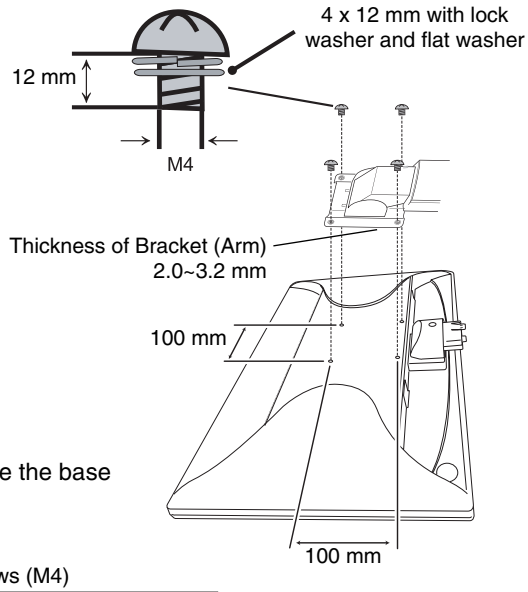

Mount Flexible arm

This LCD monitor is designed for use with a flexible arm.

1. Follow the instructions on how Remove Base Stand for Mounting to remove the base stand.
2. Please use screws (4pcs) as shown in the picture when installing.

Caution: To meet the safety requirements, the monitor must be mounted to an arm which, guaranties the necessary stability under consideration of the weight of the monitor. The LCD monitor shall only be used with an approved arm (e.g. GS mark).

NOTE: Tighten all screws. (recommended Fasten Force: 98 - 137N•cm)

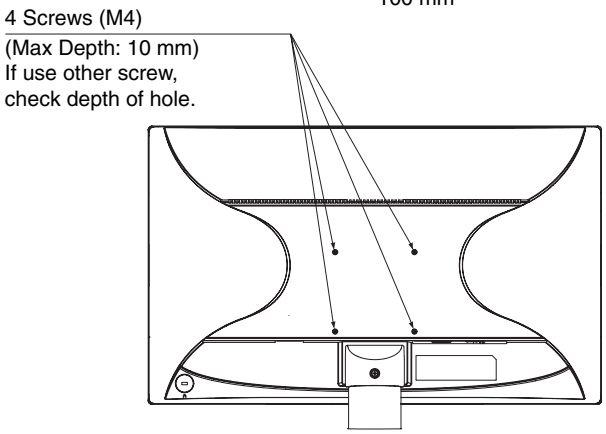

Weight of LCD assembly: 3.6 kg

Controls

OSD (On-Screen Display) Control Functions

1. Basic functions of the keys on the front of the monitor

OSD Menu	SELECT	–	+	INPUT/RESET
Not displaying on screen	Displays OSD.	Shortcut to Brightness.	Shortcut to Contrast.	Selects input signal.
Displaying on screen				
Icon Select	Displays OSD menu and selects function icon.	Moves leftward.	Moves rightward.	
Function Adjustment	Adjusts the function of the selected icon.	Adjusts down.	Adjusts up.	Resets the function.

2. OSD structure

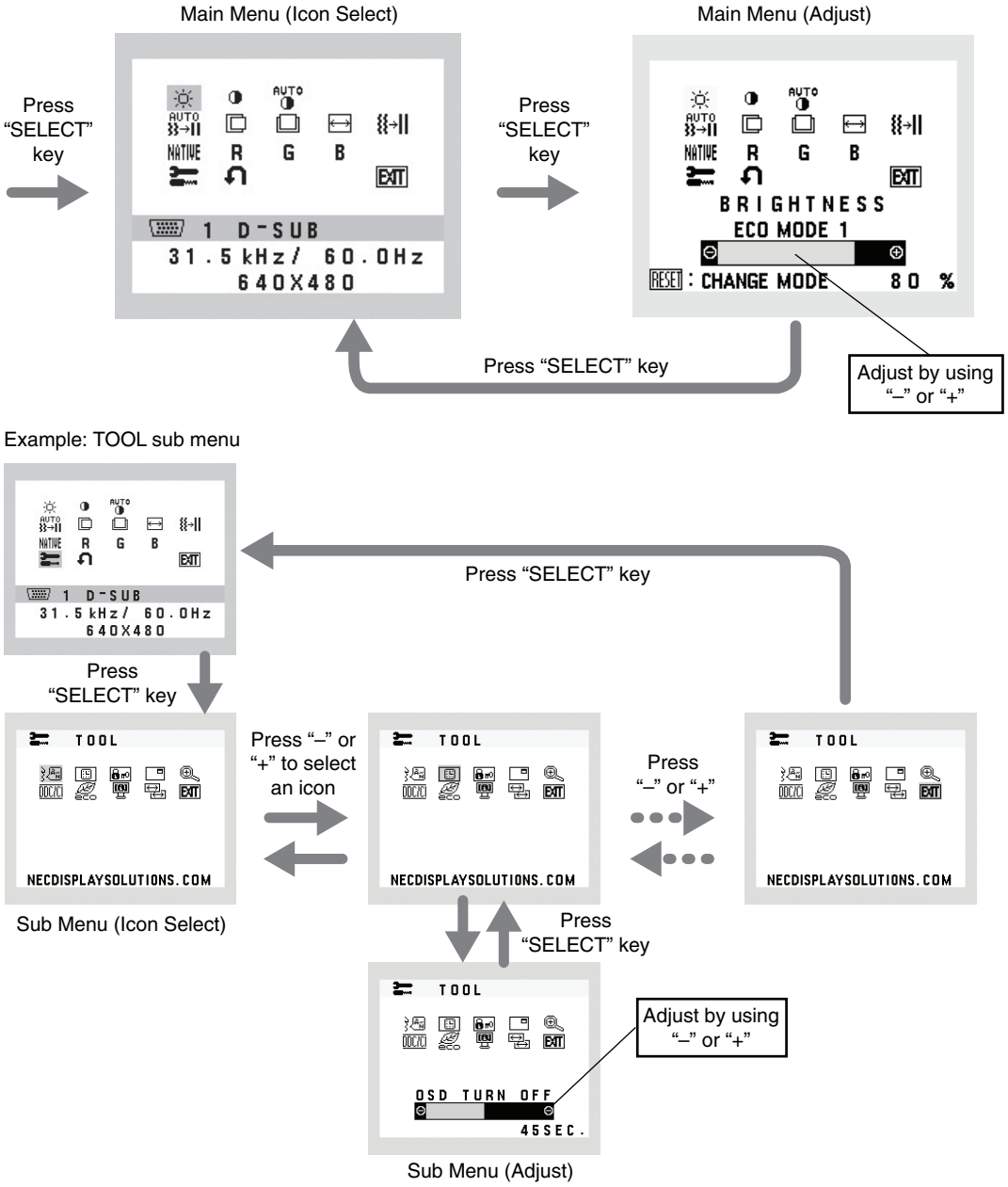

BRIGHTNESS
Adjusts the overall image and background screen brightness.
To enter the ECO MODE, press the “INPUT/RESET” button.

ECO MODE OFF: Sets brightness variable from 0% to 100%.
ECO MODE1: Sets brightness 80%.
This setting automatically adjusts brightness within a power consumption range that meets Energy Star measurement conditions.
ECO MODE2: Sets brightness 40%.
This setting can adjust brightness within the range that power has reduced 45% from maximum brightness setting.

CONTRAST
Adjusts the image brightness in relation to the background.

AUTO CONTRAST (Analog input only)
Adjusts the image displayed for non-standard video inputs.

AUTO ADJUST (Analog input only)
Automatically adjusts the Image Position, the H. Size and Fine setting.

LEFT/RIGHT (Analog input only)
Controls Horizontal Image Position within the display area of the LCD.

DOWN/UP (Analog input only)
Controls Vertical Image Position within the display area of the LCD.

H. SIZE (Analog input only)
Adjusts the horizontal size by increasing or decreasing this setting.

FINE (Analog input only)
Improves focus, clarity and image stability by increasing or decreasing this setting.

COLOR CONTROL SYSTEMS
Five color presets (9300/7500/sRGB/USER/NATIVE) select the desired color setting.

COLOR RED
Increase or decreases Red. The change will appear on screen.

COLOR GREEN
Increase or decreases Green. The change will appear on screen.

COLOR BLUE
Increase or decreases Blue. The change will appear on screen.

TOOL
Selecting TOOL allows you to get into the sub menu.

FACTORY PRESET
Selecting Factory Preset allows you to reset all OSD control settings back to the factory settings. The INPUT/RESET button will need to be held down for several seconds to take effect. Individual settings can be reset by highlighting the control to be reset and pressing the INPUT/RESET button.

EXIT
Selecting EXIT allows you exit OSD menu/ sub menu.

LANGUAGE
OSD control menus are available in nine languages.

OSD TURN OFF

The OSD control menu will stay on as long as it is in use. In the OSD Turn OFF submenu, you can select how long the monitor waits after the last touch of a button to shut off the OSD control menu. The preset choices are 10 - 120 seconds by 5 seconds step.

OSD LOCK OUT

This control completely locks out access to all OSD control functions except for BRIGHTNESS and CONTRAST. To activate the OSD LOCK OUT function, enter TOOL submenu, select “OSD LOCK OUT”, press and hold “INPUT/RESET” and “+” simultaneously until “OSD LOCKED OUT” indicator appears. To deactivate, press SELECT, then repeat the same steps until OSD main menu displays on screen.

SIGNAL INFORMATION

If you select “ON”, monitor displays “VIDEO INPUT MENU” after changing the input.
If you select “OFF”, monitor doesn’t display “VIDEO INPUT MENU” after changing the input.

EXPANSION

Selects the zoom mode.
This function works, when input signal timing is under native resolution.
FULL: The image is expanded to full screen, regardless of the resolution.
ASPECT: The image is expanded without changing the aspect ratio.

DDC/CI

Turns ON or OFF the two way communication and control of the monitor.

CARBON SAVINGS

Displays the estimated carbon saving information in kg.
The carbon footprint factor in the carbon saving calculation is based on the OECD (2008 Edition).
The carbon saving information can be reset by pressing the INPUT/RESET button.

CARBON USAGE

Displays the estimated carbon usages information in kg. This is the arithmetic estimation, not actual measurement value.

MONITOR INFO

Indicates the model and serial numbers of your monitor.

INPUT RESOLUTION (Analog input only)

This function works, when user selects below special input signal timing.

Select resolution’s priority of input signal to one of the following signal: 1280x768, 1360x768 and 1366x768 or 1400x1050 and 1680x1050.
1280x768, 1360x768, 1366x768: Determines the resolution to 1280x768, 1360x768 or 1366x768.
1400x1050, 1680x1050: Determines the resolution to 1400x1050 or 1680x1050.

OSD Warning

OSD Warning menus disappear by pressing SELECT.

NO SIGNAL: This function gives a warning when there is no signal present. After power is turned on or when there is a change of input signal or video is inactive, the **NO SIGNAL** window will appear.

OUT OF RANGE: This function gives a recommendation of the optimized resolution and refresh rate. After the power is turned on or there is a change of input signal or the video signal doesn’t have proper timing, the **OUT OF RANGE** menu will appear.

Specifications

Monitor Specifications		AccuSync AS242W	Notes
LCD Module	Diagonal: Viewable Image Size: Native Resolution (Pixel Count):	60.97 cm/24.0 inches 60.97 cm/24.0 inches 1920 x 1080	Active matrix; thin film transistor (TFT) liquid crystal display (LCD); 0.277 mm dot pitch; 250 cd/m^2 white luminance; 1000:1 contrast ratio (typical).
Input Signal			
DVI:	DVI-D 24pin:	Digital RGB	DVI (HDCP)
VGA:	15pin Mini D-sub:	Analog RGB Sync	0.7 Vp-p/75 ohm Separate sync.TTL level Positive/Negative
Display Colors		16,777,216	Depends on display card used.
Synchronization Range	Horizontal: Vertical:	31.5 kHz to 81.1 kHz 56.0 Hz to 76.0 Hz	Automatically Automatically
Viewing Angle	Left/Right: Up/Down:	±85° (CR > 10) ±80° (CR > 10)	
Resolutions Supported (Some systems may not support all modes listed).		720 x 400*1 VGA text 640 x 480*1 at 60 Hz to 75 Hz 800 x 600*1 at 56 Hz to 75 Hz 832 x 624*1 at 75 Hz 1024 x 768*1 at 60 Hz to 75 Hz 1152 x 870*1 at 75 Hz 1280 x 960*1 at 60 Hz 1280 x 1024*1 at 60 Hz to 75 Hz 1440 x 900*1 at 60 Hz 1680 x 1050*1 at 60 Hz 1920 x 1080 at 60 Hz.....	NEC DISPLAY SOLUTIONS cites recommended resolution for optimal display performance.
Active Display Area	Landscape: Horiz.: Vert.:	531.4 mm/20.9 inches 298.9 mm/11.8 inches	
Power Supply		AC 100-240 V ~ 50/60 Hz	
Current Rating		0.45 - 0.25 A	
Dimensions	Landscape:	571.4 mm (W) x 400.9 mm (H) x 211.2 mm (D) 22.5 inches (W) x 15.8 inches (H) x 8.3 inches (D)	
Weight		4.0 kg (8.8 lbs)	
Environmental Considerations	Operating Temperature: Humidity: Altitude: Storage Temperature: Humidity: Altitude:	5°C to 35°C/41°F to 95°F 20% to 80% 0 to 6,562 Feet/0 to 2,000 m -10°C to 60°C/14°F to 140°F 10% to 85% 0 to 40,000 Feet/0 to 12,192 m	

*1 Interpolated Resolutions: When resolutions are shown that are lower than the pixel count of the LCD module, text may appear different. This is normal and necessary for all current flat panel technologies when displaying non-native resolutions full screen. In flat panel technologies, each dot on the screen is actually one pixel, so to expand resolutions to full screen, an interpolation of the resolution must be done.

NOTE: Technical specifications are subject to change without notice.

Features

Reduced Footprint: Provides the ideal solution for environments with space constraints that still require superior image quality. The monitor's small footprint and low weight allow it to be moved or transported easily from one location to another.

Color Control Systems: Allow you to adjust the colors on your screen and customize the color accuracy of your monitor to a variety of standards.

OSD (On-Screen Display) Controls: Allow you to quickly and easily adjust all elements of your screen image via simple to use on-screen menus.

NaViSet Software offers an expanded and intuitive graphical interface, allowing you to more easily adjust OSD display settings via mouse and keyboard.

No-Touch Auto Adjust (Analog input only): Automatically adjusts the monitor to optimal settings upon initial setup.

ErgoDesign Features: Enhanced human ergonomics to improve the working environment, protect the health of the user and save money. Examples include OSD controls for quick and easy image adjustments, tilt base for preferred angle of vision, small footprint and compliance with MPRII and TCO guidelines for lower emissions.

Plug and Play: The Microsoft® solution with the Windows® operating system facilitates setup and installation by allowing the monitor to send its capabilities (such as screen size and resolutions supported) directly to your computer, automatically optimizing display performance.

Intelligent Power Manager System: Provides innovative power-saving methods that allow the monitor to shift to a lower power consumption level when on but not in use, saving two-thirds of your monitor energy costs, reducing emissions and lowering the air conditioning costs of the workplace.

Multiple Frequency Technology: Automatically adjusts monitor to the display card's scanning frequency, thus displaying the resolution required.

FullScan Capability: Allows you to use the entire screen area in most resolutions, significantly expanding image size.

VESA Standard Mounting Interface: Allows users to connect your AccuSync monitor to any VESA standard third party mounting arm or bracket.

Environmental Impact: Annual typical maximum operating carbon footprint of this monitor (world-wide average) is approximately 21.8 kg (calculated by: rated wattage x 8 hours per day x 5 days a week x 45 weeks per year x Power-to-Carbon conversion factor - conversion factor is based on OECD publication of global CO2 emissions 2008 Edition).
This monitor has a manufacturing carbon footprint of approximately 29.0 kg.
Note: The manufacturing and operating carbon footprints are calculated by a unique algorithm developed exclusively by NEC for its monitors, and are accurate at the time of printing. NEC reserves the right to publish updated carbon footprint values.

HDCP (High-bandwidth Digital Content Protection): HDCP is a system for preventing illegal copying of video data sent over a Digital Visual Interface (DVI). If you are unable to view material via the DVI input, this does not necessarily mean the display is not functioning properly. With the implementation of HDCP, there may be cases in which certain content is protected with HDCP and might not be displayed due to the decision/intention of the HDCP community (Digital Content Protection, LLC).

Troubleshooting

No picture

- The signal cable should be completely connected to the display card/computer.
- The display card should be completely seated in its slot.
- Check front power switch and computer power switch should be in the ON position.
- Check to make sure that a supported mode has been selected on the display card or system being used. (Please consult display card or system manual to change graphics mode.)
- Check the monitor and your display card with respect to compatibility and recommended settings.
- Check the signal cable connector for bent or pushed-in pins.
- Check the signal input.

Power Button does not respond

- Unplug the power cord of the monitor from the AC outlet to turn off and reset the monitor.

Image persistence

- Image persistence is when a “ghost” of an image remains on the screen even after the monitor has been turned off. Unlike CRT monitors, LCD monitors’ image persistence is not permanent, but constant images being displayed for a long period of time should be avoided.
  To alleviate image persistence, turn the monitor off for as long as an image was displayed. For example, if an image was on the monitor for one hour and a residual image remains, the monitor should be turned off for one hour to erase the image.

NOTE: As with all personal display devices, NEC DISPLAY SOLUTIONS recommends using a screen saver at regular intervals whenever the screen is idle or turning off the monitor when not in use.

Message “OUT OF RANGE” is displayed (screen is either blank or shows rough images only)

- Image is displayed only roughly (pixels are missing) and OSD warning “OUT OF RANGE” is displayed: Either signal clock or resolution is too high. Choose one of the supported modes.
- OSD warning “OUT OF RANGE” is displayed on a blank screen: Signal frequency is out of range. Choose one of the supported modes.

Image is unstable, unfocused or swimming is apparent

- Signal cable should be completely attached to the computer.
- Use the OSD Image Adjust controls to focus and adjust display by increasing or decreasing the fine total. When the display mode is changed, the OSD Image Adjust settings may need to be re-adjusted.
- Check the monitor and your display card with respect to compatibility and recommended signal timings.
- If your text is garbled, change the video mode to non-interlace and use 60Hz refresh rate.

LED on monitor is not lit (*no blue or amber color can be seen*)

- Power Switch should be in the ON position and power cord should be connected.

Picture is not as bright

- Make sure ECO MODE is turned off.

Display image is not sized properly

- Use the OSD Image Adjust controls to increase or decrease the H.SIZE.
- Check to make sure that a supported mode has been selected on the display card or system being used. (Please consult display card or system manual to change graphics mode.)

No Video

- If no video is present on the screen, turn the Power button off and on again.
- Make certain the computer is not in a power-saving mode (touch the keyboard or mouse).

TCO Certified Displays 6

Congratulations!

This product is TCO Certified – for Sustainable IT

TCO Certified is an international third party sustainability certification for IT products. TCO Certified ensures that the manufacture, use and recycling of IT products reflect environmental, social and economic responsibility. Every TCO Certified product model is verified by an accredited independent test laboratory.

This product has been verified to meet all the criteria in TCO Certified, including:

Corporate Social Responsibility
Socially responsible production - working conditions and labor law in manufacturing country
Energy Efficiency
Energy efficiency of product and power supply. Energy Star compliant, where applicable
Environmental Management System
Manufacturer must be certified according to either ISO 14001 or EMAS
Minimization of Hazardous Substances
Limits on cadmium, mercury, lead & hexavalent chromium including requirements for mercury-free products, halogenated substances and hazardous flame retardants
Design for Recycling
Coding of plastics for easy recycling. Limit on the number of different plastics used.
Product Lifetime, Product Take Back
Minimum one-year product warranty. Minimum three-year availability of spare parts. Product takeback
Packaging
Limits on hazardous substances in product packaging. Packaging prepared for recycling
Ergonomic, User-centered design
Visual ergonomics in products with a display. Adjustability for user comfort (displays, headsets)
Acoustic performance – protection against sound spikes (headsets) and fan noise (projectors, computers)
Ergonomically designed keyboard (notebooks)
Electrical Safety, minimal electro-magnetic Emissions
Third Party Testing
All certified product models have been tested in an independent, accredited laboratory.

A detailed criteria set is available for download at www.tcodevelopment.com, where you can also find a searchable database of all TCO Certified IT products.

TCO Development, the organization behind TCO Certified, has been an international driver in the field of Sustainable IT for 20 years. Criteria in TCO Certified are developed in collaboration with scientists, experts, users and manufacturers. Organizations around the world rely on TCO Certified as a tool to help them reach their sustainable IT goals. We are owned by TCO, a non-profit organization representing office workers. TCO Development is headquartered in Stockholm, Sweden, with regional presence in North America and Asia.

For more information, please visit
www.tcodevelopment.com

Manufacturer’s Recycling and Energy Information

NEC DISPLAY SOLUTIONS is strongly committed to environmental protection and sees recycling as one of the company’s top priorities in trying to minimize the burden placed on the environment. We are engaged in developing environmentally-friendly products, and always strive to help define and comply with the latest independent standards from agencies such as ISO (International Organisation for Standardization) and TCO (Swedish Trades Union).

Disposing of your old NEC product

The aim of recycling is to gain an environmental benefit by means of re-use, upgrading, reconditioning or reclamation of material. Dedicated recycling sites ensure that environmentally harmful components are properly handled and securely disposed. To ensure the best recycling of our products, **NEC DISPLAY SOLUTIONS offers a variety of recycling procedures** and gives advice on how to handle the product in an environmentally sensitive way, once it has reached the end of its life.

All required information concerning the disposal of the product and country-specific information on recycling facilities can be found on our following websites:

http://www.nec-display-solutions.com/greencompany/ (in Europe),

http://www.nec-display.com (in Japan) or

http://www.necdisplay.com (in USA).

Energy Saving

This monitor features an advanced energy saving capability. When a Display Power Management signal is sent to the monitor, the Energy Saving mode is activated. The monitor enters a single Energy Saving mode.

Mode	Power consumption	LED color
Maximum Operation	Approx. 24 W	Blue
Normal Operation	Approx. 19 W (Default setting)	Blue
Energy Saving Mode	Less than 0.35 W	Amber
Off Mode	Less than 0.30 W	Unlit

WEEE Mark (European Directive 2012/19/EU)

Within the European Union

EU-wide legislation, as implemented in each Member State, requires that waste electrical and electronic products carrying the mark (left) must be disposed of separately from normal household waste. This includes monitors and electrical accessories, such as signal cables or power cords. When you need to dispose of your NEC display products, please follow the guidance of your local authority, or ask the shop where you purchased the product, or if applicable, follow any agreements made between yourself and NEC.

The mark on electrical and electronic products only applies to the current European Union Member States.

Outside the European Union

If you wish to dispose of used electrical and electronic products outside the European Union, please contact your local authority so as to comply with the correct disposal method.