Empowered by Innovation NEC

MOBILE VIDEOWALL TROLLEY PDVWM 3X3 46 55 L

ORDER CODE: 100013265

Mobile Videowall Trolley for 3x3 installations of NEC MultiSync® 46” XUN/V, 55” XUN/S and 46” & 55” XS and P Series.

This videowall trolley provides tool-less micro adjustment for precise display alignment along with the strength to hold up to 9 displays. A security screw locking mechanism ensures that the displays stay in the location intended for perfect viewing positioning. With 360° swivel, the durable swivel casters roll smoothly offering easy maneuverability.

PDVWM 3x3 46 55 L

TOOL-LESS MICRO ADJUSTMENT

Delivering Genuine Benefits

- Free standing videowall solution for 3x3 display configurations
- Tool-less micro adjustments at 8 point seamlessly align the displays
- Multiple mounting slots allow for multiple height options
- With strong legs, paired with horizontal supports, the wall cart holds a maximum load of 454kg
- Lockable 127mm casters enable safe and easy maneuverability over various flooring surfaces
- Cable management through the stand upright columns
- Base cover with internal media player shelf, hides cables for a clean appearance
- Converts from a trolley to a stand with optional Cart Feet FT01

PDVWM 3x3 46 55 L

MOBILE VIDEOWALL TROLLEY PDVWM 3X3 46 55 L

ORDER CODE: 100013265

TECHNICAL DRAWINGS

PDVWM 3X3 46 55 L

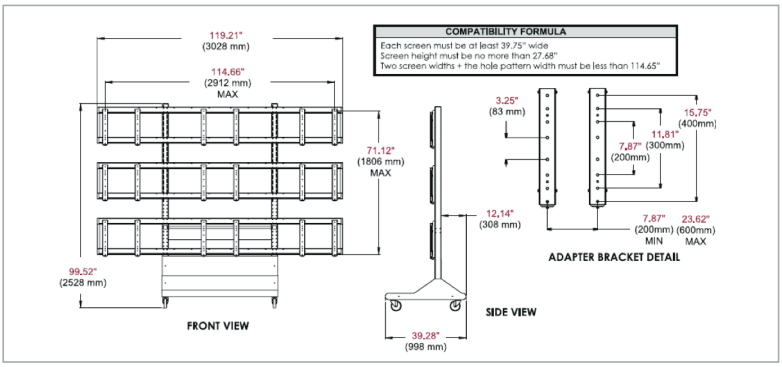

TECHNICAL SPECIFICATIONS

ORDER CODES			
PDVWM 3x3 46 55 L	100013265	**FT01**	100013264

MIN. DEPTH	998 mm
VESA PATTERN	200 x 200; 600 x 400
CONFIGURATION	
Configuration	3x3
Orientation	Landscape
Max. weight capacity	454 kg
MECHANICAL	
PACKAGE DIMENSIONS (H X W X D)	
Box1	2565 x 952 x 317 mm
Box2	3073 x 102 x 102 mm
Box3	3073 x 102 x 102 mm
Shipping Weight	175 kg
Weight of Trolley	168 kg
Shipping Content	Cart frame, 127mm casters, adapter brackets, cart base cover and mounting hardware
OTHER SPECIFICATIONS	
Supported NEC Public Displays	MultiSync® 46" XUN/V, 55" XUN/S and 46" & 55" XS and P Series
Videowall options	Over Frame Kit (KT-46UN-OF2, KT-46UN-OF3, KT-55UN-OF, KT-55UN-OF2); Remote Control Kit (KT-RC, KT-RC2); Calibration Kit (KT-LFD-CC, KT-LFD-CC2)
Certificates / Standards	UL Listed, RoHs
Warranty	3 years
For additional pictures and Solutions overview, Visit www.nec-display-solutions.com for details.	

This document is © Copyright 2012 NEC Display Solutions Europe GmbH. All rights are reserved in favour of their respective owners. The document, or parts thereof, should not be copied, adapted, redistributed, or otherwise used without the prior written permission of NEC Display Solutions Europe GmbH. This document is provided "as is" without warranty of any kind whatsoever, either express or implied. Errors and omissions are excepted.

NEC Display Solutions Europe GmbH may make changes, revisions or improvements in, or discontinue the supply of any product described or referenced in this document at any time without notice. 12. May 2014

NEC Information:
Call: +49 (0)89/99 699-0
Email: infomail@nec-displays.com

www.nec-display-solutions.com

Empowered by Innovation NEC