AccuSync LCD73VM
AccuSync LCD93VM

User's Manual

NEC

WARNING

TO PREVENT FIRE OR SHOCK HAZARDS, DO NOT EXPOSE THIS UNIT TO RAIN OR MOISTURE. ALSO, DO NOT USE THIS UNIT'S POLARIZED PLUG WITH AN EXTENSION CORD RECEPTACLE OR OTHER OUTLETS UNLESS THE PRONGS CAN BE FULLY INSERTED.

REFRAIN FROM OPENING THE CABINET AS THERE ARE HIGH VOLTAGE COMPONENTS INSIDE. REFER SERVICING TO QUALIFIED SERVICE PERSONNEL.

CAUTION

RISK OF ELECTRIC SHOCK • DO NOT OPEN

CAUTION: TO REDUCE THE RISK OF ELECTRIC SHOCK, DO NOT REMOVE COVER (OR BACK). NO USER SERVICEABLE PARTS INSIDE. REFER SERVICING TO QUALIFIED SERVICE PERSONNEL.

This symbol warns user that uninsulated voltage within the unit may have sufficient magnitude to cause electric shock. Therefore, it is dangerous to make any kind of contact with any part inside this unit.

This symbol alerts the user that important literature concerning the operation and maintenance of this unit has been included. Therefore, it should be read carefully in order to avoid any problems.

Caution:

When operating the AccuSync LCD73VM/AccuSync LCD93VM with a 220-240V AC power source in Europe, use the power cord provided with the monitor.

In the UK, a BS approved power cord with a moulded plug has a Black (five Amps) fuse installed for use with this equipment. If a power cord is not supplied with this equipment please contact your supplier.

For all other cases, use a power cord that matches the AC voltage of the power outlet and has been approved by and complies with the safety standard of your particular country.

Declaration

Declaration of the Manufacturer

We hereby certify that the colour monitors AccuSync LCD73VM (L175GZ)/AccuSync LCD93VM (L195GY) are in compliance with

Council Directive 73/23/EEC:
- EN 60950-1

Council Directive 89/336/EEC:
- EN 55022
- EN 61000-3-2
- EN 61000-3-3
- EN 55024

and marked with

CE

NEC Display Solutions, Ltd.
4-13-23, Shibaura,
Minato-Ku
Tokyo 108-0023, Japan

As an ENERGY STAR Partner, NEC Display Solutions of America, Inc. has determined that this product meets the ENERGY STAR guidelines for energy efficiency. ENERGY STAR is a U.S. registered mark. The ENERGY STAR emblem does not represent EPA endorsement of any product or service.

ErgoDesign is a registered trademark of NEC Display Solutions, Ltd. in Austria, Benelux, Denmark, France, Germany, Italy, Norway, Spain, Sweden, U.K..
IBM PC/XT/AT, PS/2, MCGA, VGA, 8514/A and XGA are registered trademarks of International Business Machines Corporation.
Apple and Macintosh are registered trademarks of Apple Computer Inc.
Microsoft and Windows are registered trademarks of the Microsoft Corporation.
NEC is a registered trademark of NEC Corporation.
All other trademarks or registered trademarks are property of their respective owners.

For the Customer to use in U.S.A. or Canada

Canadian Department of Communications Compliance Statement

DOC: This Class B digital apparatus meets all requirements of the Canadian Interference-Causing Equipment Regulations.

Cet appareil numérique de la classe B respecte toutes les exigences du Règlement sur le matériel brouiller du Canada.

C-UL: Bears the C-UL Mark and is in compliance with Canadian Safety Regulations according to CSA C22.2 No. 60950-1.

Ce produit porte la marque 'C-UL' et se conforme aux règlements de sûrele Canadiens selon CAN/CSA C22.2 No. 60950-1.

FCC Information

1. Use the attached specified cables with the AccuSync LCD73VM/AccuSync LCD93VM colour monitor so as not to interfere with radio and television reception.
   (1) The power supply cord you use must have been approved by and comply with the safety standards of U.S.A., and meet the following condition.

Power supply cord Length Plug shape	Non shield type, 3-conductor 1.8 m 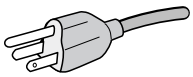 U.S.A

   (2) Please use the supplied shielded video signal cable and audio cable. Use of other cables and adapters may cause interference with radio and television reception.

2. This equipment has been tested and found to comply with the limits for a Class B digital device, pursuant to part 15 of the FCC Rules. These limits are designed to provide reasonable protection against harmful interference in a residential installation. This equipment generates, uses, and can radiate radio frequency energy, and, if not installed and used in accordance with the instructions, may cause harmful interference to radio communications. However, there is no guarantee that interference will not occur in a particular installation. If this equipment does cause harmful interference to radio or television reception, which can be determined by turning the equipment off and on, the user is encouraged to try to correct the interference by one or more of the following measures:
   - Reorient or relocate the receiving antenna.
   - Increase the separation between the equipment and receiver.
   - Connect the equipment into an outlet on a circuit different from that to which the receiver is connected.
   - Consult your dealer or an experienced radio/TV technician for help.

   If necessary, the user should contact the dealer or an experienced radio/television technician for additional suggestions. The user may find the following booklet, prepared by the Federal Communications Commission, helpful: "How to Identify and Resolve Radio-TV Interference Problems." This booklet is available from the U.S. Government Printing Office, Washington, D.C., 20402, Stock No. 004-000-00345-4.

Declaration of Conformity

This device complies with Part 15 of FCC Rules. Operation is subject to the following two conditions. (1) This device may not cause harmful interference, and (2) this device must accept any interference received, including interference that may cause undesired operation.

U.S. Responsible Party:	**NEC Display Solutions of America, Inc.**
Address:	**500 Park Blvd, Suite 1100** **Itasca, Illinois 60143**
Tel. No.:	**(630) 467-3000**
Type of Product:	Display Monitor
Equipment Classification:	Class B Peripheral
Model:	AccuSync LCD73VM (L175GZ) AccuSync LCD93VM (L195GY)

We hereby declare that the equipment specified above conforms to the technical standards as specified in the FCC Rules.

Contents

Your new NEC AccuSync LCD monitor box* should contain the following:

- AccuSync LCD monitor with tilt base
- Audio Cable
- Power Cord
- User's Manual
- CD-ROM
- Base Stand
- Cable Holder

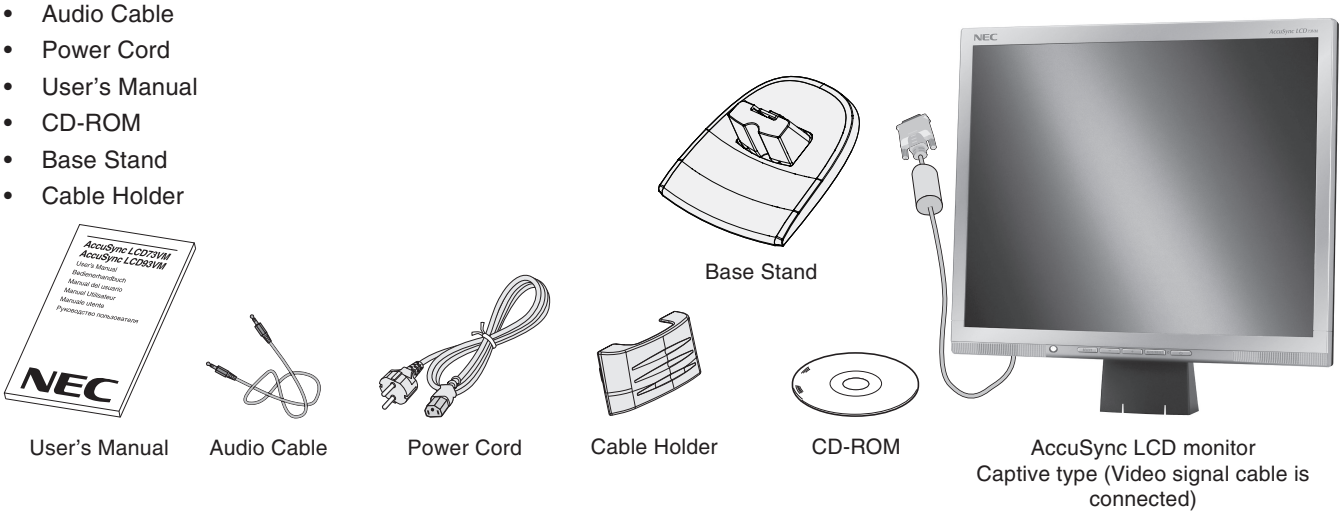

* *Remember to save your original box and packing material to transport or ship the monitor.*

Quick Start

To attach the Base to the LCD Stand:

1. Insert the front of the LCD stand into the holes in the front of the Base (**Figure S.1**).
2. Attach the Base to the Stand. The locking tab on the Base should fit into the hole on the back of the Stand (**Figure S.1**).

To attach the Cable Holder:

1. Attach the Cable Holder on to the Base. Insert the hooks on the Cable Holder into the holes at the back of the Stand and slide the Cable Holder downward into place (**Figure S.1**).

NOTE: Please confirm that the tabs are completely secure.

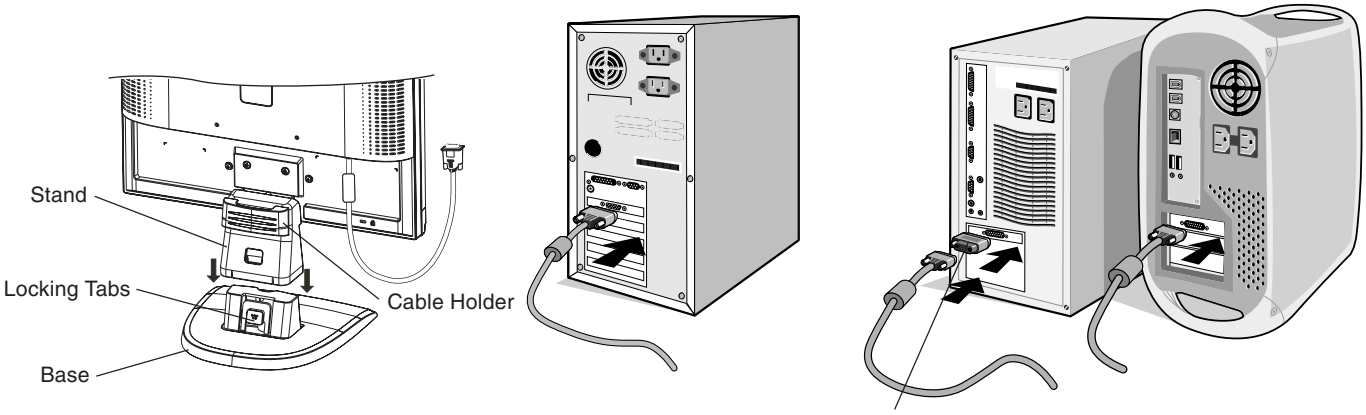

Figure S.1 **Figure A.1** **Figure A.2**

To attach the AccuSync LCD monitor to your system, follow these instructions:

1. Turn off the power to your computer.
2. **For the PC with Analog output:** Connect the 15-pin mini D-SUB signal cable connected with the monitor to the connector of the display card in your system (**Figure A.1**). Tighten all screws.

   For the Mac: Connect the MultiSync Macintosh cable adapter (not included) to the computer. Attach the 15-pin mini D-SUB signal cable to the MultiSync Macintosh cable adapter (**Figure A.2**). Tighten all screws.

NOTE: Some Macintosh systems do not require a Macintosh cable adapter.

3. Connect the Audio Cable to the appropriate connector on the back of the monitor (**Figure B.1**). Connect the Headphone (not included) to the appropriate connector at the front of the monitor (**Figure C.1**).
4. Connect the power cord to the power outlet. Place the Video Signal Cable and power cord to the Cable holder (**Figure B.1**).

NOTE: Adjust position of cable that place under the Cable holder to avoid damage for cable or monitor.

NOTE: Please refer to Caution section of this manual for proper selection of power cord.

5. Turn on the monitor with the front power button and the computer (**Figure C.1**).

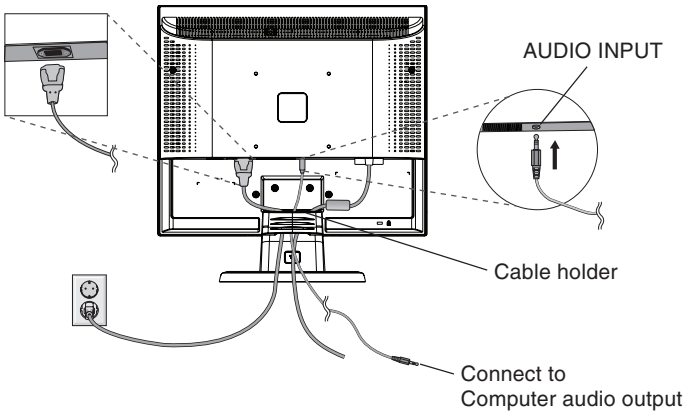

Figure B.1

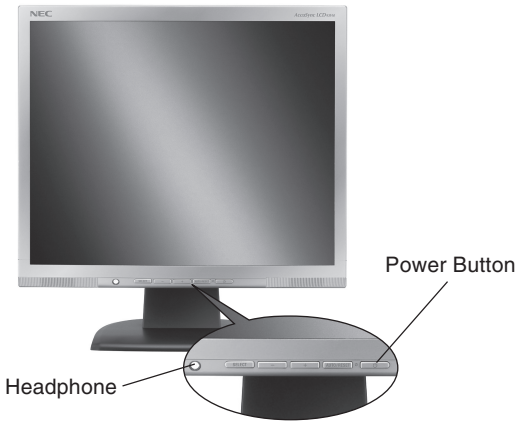

Figure C.1

6. No-touch Auto Adjust automatically adjusts the monitor to optimal settings upon initial setup for most timings. For further adjustments, use the following OSM controls:
   - Auto Adjust Contrast
   - Auto Adjust

   Refer to the **Controls** section of this User's Manual for a full description of these OSM controls.

NOTE: If you have any problem, please refer to the **Troubleshooting** section of this User's Manual.

Tilt

Grasp both sides of the monitor screen with your hands and adjust the tilt as desired (**Figure TS.1**).

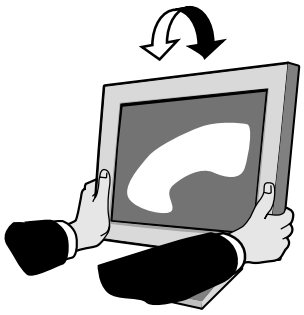

Figure TS.1

Remove Monitor Stand for Mounting

To prepare the monitor for alternative mounting purposes:

1. Disconnect all cables.
2. Place monitor face down on a non-abrasive surface (**Figure R.1**).
3. Remove the 3 screws connecting the monitor to the stand and remove the stand as indicated (**Figure R.2**). The monitor is now ready for mounting in an alternative manner.
4. Connect the AC cord to the back of the monitor (**Figure R.3**).
5. Reverse this process to re-attach stand.

NOTE: Use only VESA-compatible alternative mounting method.

NOTE: Handle with care when removing monitor stand.

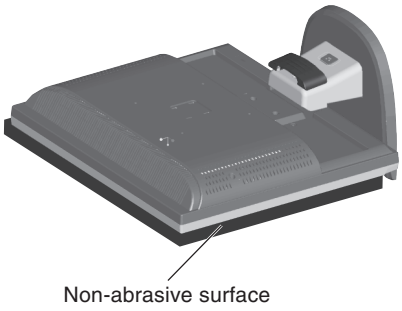

Figure R.1

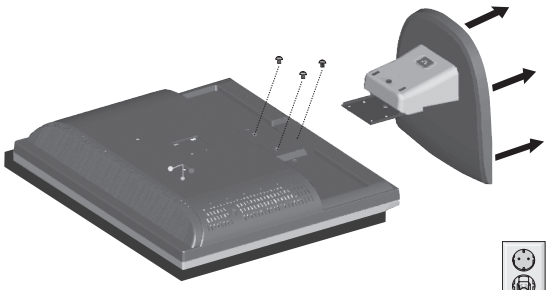

Figure R.2

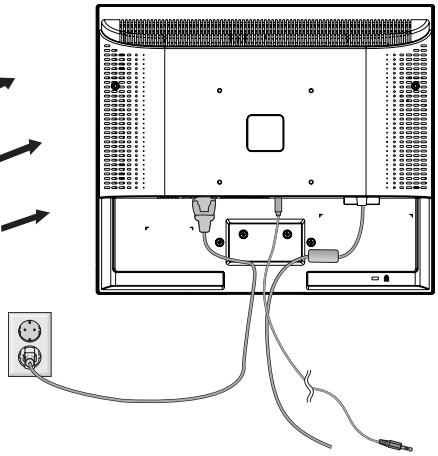

Figure R.3

Removing the Base

NOTE: Always remove the Base when shipping the LCD.

1. Place monitor face down on a non-abrasive surface (**Figure R.1**).
2. While using your thumbs, press the bottom tabs upward to unlock.
3. Pull the unlocked base off the stand.

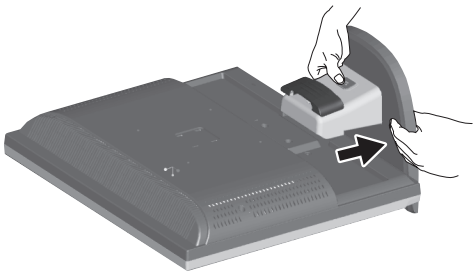

Connecting a Flexible Arm

This LCD monitor is designed for use with a flexible arm.

Please use the screws (4pcs) as shown in the picture when installing. To meet the safety requirements, the monitor must be mounted to an arm which guaranties the necessary stability under consideration of the weight of the monitor.

The LCD monitor shall only be used with an approved arm (e.g. GS mark).

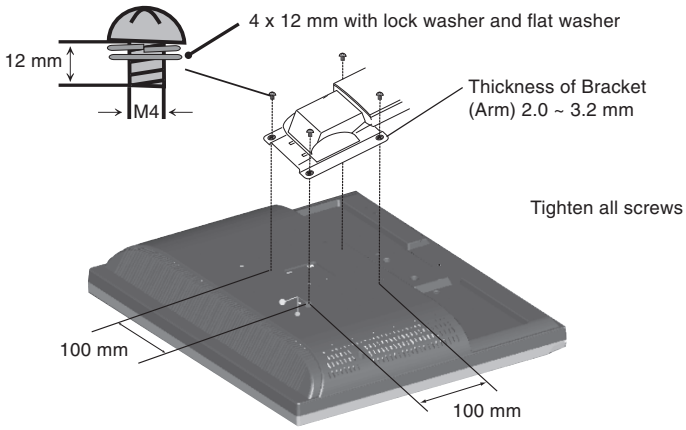

Specifications

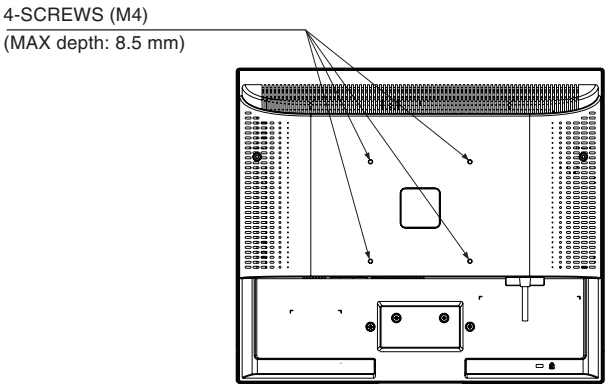

Weight of LCD assembly: 3.9 kg - LCD73VM (MAX)
5.2 kg - LCD93VM (MAX)

Controls

OSM (On-Screen Manager) control buttons on the front of the monitor function as follows:

1. Basic function at pressing each key

Button	SELECT	–	+	AUTO / RESET
At No OSD showing	Showing OSM.	Shortcut to Bright adjust window.	Shortcut to Volume adjust window.	“Auto adjust” operate.
At OSD showing (Icon selection stage)	Go to Adjustment stage.	Cursor goes to left.	Cursor goes to right.	
At OSD showing (Adjustment stage)	Go to Icon selection stage.	Adjust value decrease or Cursor for adjust goes to left.	Adjust value increase or Cursor for adjust goes to right.	Reset operation. Mute off/on switch on Volume adjustment window.

2. OSM structure

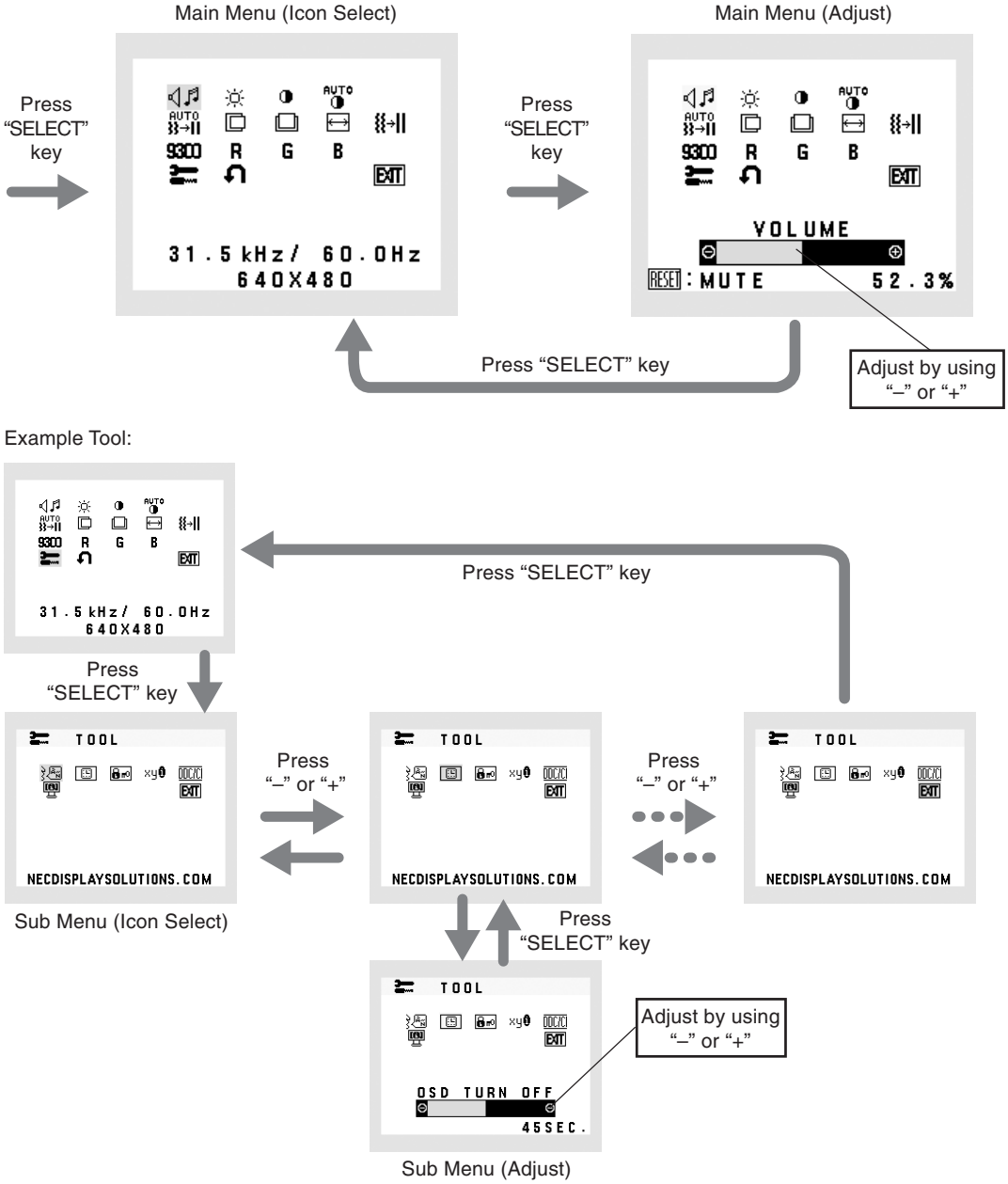

AUDIO
Audio volume icon is chosen, depending on the volume condition (AUTO/RESET).

BRIGHTNESS
Adjusts the overall image and background screen brightness.

CONTRAST
Adjusts the image brightness in relation to the background.

AUTO CONTRAST
Adjusts the image displayed for non-standard video inputs.

AUTO ADJUST
Automatically adjusts the Image Position, the H. Size and Fine setting.

LEFT/RIGHT
Controls Horizontal Image Position within the display area of the LCD.

DOWN/UP
Controls Vertical Image Position within the display area of the LCD.

H. SIZE
Adjusts the horizontal size by increasing or decreasing this setting.

FINE
Improves focus, clarity and image stability by increasing or decreasing this setting.

COLOUR CONTROL SYSTEMS
Five colour presets (9300/7500/sRGB/USER/NATIVE) select the desired colour setting.
The sRGB and NATIVE, colour presets are standard and cannot be changed.

COLOUR RED
Increase or decreases Red. The change will appear on screen.

COLOUR GREEN
Increase or decreases Green. The change will appear on screen.

COLOUR BLUE
Increase or decreases Blue. The change will appear on screen.

TOOL
Selecting TOOL allows you to get into the sub menu.

FACTORY PRESET
Selecting Factory Preset allows you to reset all OSM control settings back to the factory settings. The RESET button will need to be held down for several seconds to tage effect. Individual settings can be reset by highlighting the control to be reset and pressing the RESET button.

EXIT
Selecting EXIT allows you exit OSM menu/ sub menu.

LANGUAGE
OSM control menus are available in nine languages.

OSM TURN OFF
The OSM control menu will stay on as long as it is in use. In the OSM Turn OFF submenu, you can select how long the monitor waits after the last touch of a button to shut off the OSM control menu. The preset choices are 10 - 120 seconds by 5 seconds step.

OSM LOCK OUT

This control completely locks out access to all OSM control functions without Brightness and Contrast. When attempting to activate OSM controls while in the Lock Out mode, a screen will appear indicating the OSM are locked out. To activate the OSM Lock Out function, press “AUTO/ RESET”, then “+” key and hold down simultaneously. To de-activate the OSM Lock Out, press “AUTO/ RESET”, then “+” key and hold down simultaneously.

RESOLUTION NOTIFIER

If ON is selected, a message will appear on the screen after 30 seconds, notifying you that the resolution is not at optimal resolution.

DDC/CI

Turns ON or OFF the two way communication and control of the monitor.

MONITOR INFO

Indicates the model and serial numbers of your monitor.

OSM Warning

OSM Warning menus disappear with SELECT button.

NO SIGNAL: This function gives a warning when there is no signal present. After power is turned on or when there is a change of input signal or video is inactive, the **No Signal** window will appear.

RESOLUTION NOTIFIER: This function gives a warning of use with optimized resolution. After power is turned on or when there is a change of input signal or the video signal doesn’t have proper resolution, the **Resolution Notifier** window will open. This function can be disabled in the TOOL menu.

OUT OF RANGE: This function gives a recommendation of the optimized resolution and refresh rate. After the power is turned on or there is a change of input signal or the video signal doesn’t have proper timing, the **Out Of Range** menu will appear.

Recommended use

Safety Precautions and Maintenance

FOR OPTIMUM PERFORMANCE, PLEASE NOTE
THE FOLLOWING WHEN SETTING UP AND
USING THE ACCUSYNC LCD COLOUR MONITOR:

- **DO NOT OPEN THE MONITOR.** There are no user serviceable parts inside and opening or removing covers may expose you to dangerous shock hazards or other risks. Refer all servicing to qualified service personnel.
- Do not spill any liquids into the cabinet or use your monitor near water.
- Do not insert objects of any kind into the cabinet slots, as they may touch dangerous voltage points, which can be harmful or fatal or may cause electric shock, fire or equipment failure.
- Do not place any heavy objects on the power cord. Damage to the cord may cause shock or fire.
- Do not place this product on a sloping or unstable cart, stand or table, as the monitor may fall, causing serious damage to the monitor.
- When operating the LCD monitor with its AC 125-240V power supply, use a power supply aord that matches the power supply voltage of the AC power outlet being used. The power supply cord you use must have been approved by and comply with the safety standards of your country. (Type H05VV-F should be used in Europe).
- In U.K, use a BS-approved power cord with molded plug having a black (5A) fuse installed for use with this monitor. If a power cord is not supplied with this monitor, please contact your supplier.
- Do not place any objects onto the monitor and do not use the monitor outdoors.
- The inside of the fluorescent tube located within the LCD monitor contains mercury. Please follow the bylaws or rules of your municipality to dispose of the tube properly.
- Do not bend power cord.
- Do not use monitor in high temperature, humid, dusty, or oily areas.
- Do not cover vent on monitor.

Immediately unplug your monitor from the wall outlet and refer servicing to qualified service personnel under the following conditions:

- When the power supply cord or plug is damaged.
- If liquid has been spilled, or objects have fallen into the monitor.
- If the monitor has been exposed to rain or water.
- If the monitor has been dropped or the cabinet damaged.
- If the monitor does not operate normally by following operating instructions.
- If monitor is broken, do not come in contact with the liquid crystal and handle with care.

CAUTION

- Allow adequate ventilation around the monitor so that heat can properly dissipate. Do not block ventilated openings or place the monitor near a radiator or other heat sources. Do not put anything on top of monitor.
- The power cable connector is the primary means of detaching the system from the power supply. The monitor should be installed close to a power outlet, which is easily accessible.
- Handle with care when transporting. Save packaging for transporting.

- **Image Persistence:** Image persistence is when a residual or “ghost” image of a previous image remains visible on the screen. Unlike CRT monitors, LCD monitors’ image persistence is not permanent, but constant images being displayed for a long period of time should be avoided.
  To alleviate image persistence, turn off the monitor for as long as the previous image was displayed. For example, if an image was on the monitor for one hour and a residual image remains, the monitor should be turned off for one hour to erase the image.

  NOTE: As with all personal display devices, NEC DISPLAY SOLUTIONS recommends using a moving screen saver at regular intervals whenever the screen is idle or turning off the monitor when not in use.

CORRECT PLACEMENT AND ADJUSTMENT OF THE MONITOR CAN REDUCE EYE, SHOULDER AND NECK FATIGUE. CHECK THE FOLLOWING WHEN YOU POSITION THE MONITOR:

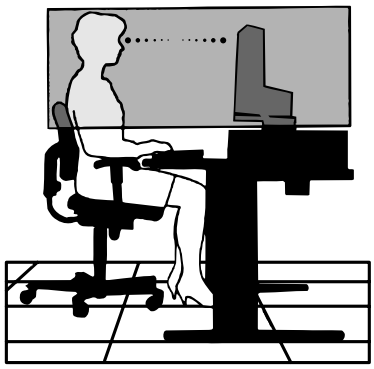

- For optimum performance, allow 20 minutes for warm-up.
- Adjust the monitor height so that the top of the screen is at or slightly below eye level. Your eyes should look slightly downward when viewing the middle of the screen.
- Position your monitor no closer than 40 cm and no further away than 70 cm from your eyes. The optimal distance is 50 cm.
- Rest your eyes periodically by focusing on an object at least 6 m away. Blink often.
- Position the monitor at a 90° angle to windows and other light sources to minimize glare and reflections. Adjust the monitor tilt so that ceiling lights do not reflect on your screen.
- If reflected light makes it hard for you to see your screen, use an antiglare filter.
- Clean the LCD monitor surface with a lint-free, non-abrasive cloth. Avoid using any cleaning solution or glass cleaner!
- Adjust the monitor's brightness and contrast controls to enhance readability.
- Use a document holder placed close to the screen.
- Position whatever you are looking at most of the time (the screen or reference material) directly in front of you to minimize turning your head while you are typing.
- Avoid displaying fixed patterns on the monitor for long periods of time to avoid image persistence (after-image effects).
- Get regular eye checkups.

Ergonomics

To realize the maximum ergonomics benefits, we recommend the following:

- Use the preset Size and Position controls with standard signals.
- Use the preset Colour Setting.
- Use non-interlaced signals with a vertical refresh rate between 60-75 Hz.
- Do not use primary colour blue on a dark background, as it is difficult to see and may produce eye fatigue to insufficient contrast.

Cleaning the LCD Panel

- When the liquid crystal panel becomes dusty or dirty, wipe gently with a soft cloth.
- Do not rub the LCD panel with coarse or hard material.
- Do not apply pressure to the LCD surface.
- Do not use OA cleaner as it will cause deterioration or discoloration to the LCD surface.

Cleaning the Cabinet

- Unplug the power supply.
- Dampen a soft cloth with water and a neutral detergent. Gently wipe the cabinet then dry gently with a soft cloth.

NOTE: Many plastics are used on the surface of the cabinet. DO NOT clean with benzene, thinner, alkaline detergent, alcoholic system detergent, glass cleaner, wax, polish cleaner, soap powder or insecticide. Do not touch rubber or vinyl to the cabinet for a long period of time. These types of fluids and fabrics can cause the paint to deteriorate, crack or peel.

Specifications AccuSync LCD73VM Monitor

Monitor Specifications		AccuSync LCD73VM Monitor	Notes
LCD Module	Diagonal:	43 cm/17 inches	Active matrix; thin film transistor (TFT)
	Viewable Image Size:	43 cm/17 inches	liquid crystal display (LCD); 0.264 mm dot
	Native Resolution (Pixel Count):	1280 x 1024	pitch; 300 cd/m² *2 white luminance, 700:1
			contrast ratio, typical, response time: 5 ms.
Input Signal	Video:	ANALOG 0.7 Vp-p/75 Ohms	
	Sync:	Separate sync.TTL Level (Positive/Negative)	
		Horizontal sync. Positive/Negative	
		Vertical sync. Positive/Negative	
Display Colours	Analog input:	16,7 M	Depends on display card used.
Synchronization Range	Horizontal:	31.5 kHz to 81.1 kHz	Automatically
	Vertical:	56 Hz to 76 Hz	Automatically
Viewing Angle	Left/Right:	-85°/+85° (CR>5)	
	Up/Down:	-85°/+85° (CR>5)	
Resolutions Supported	Landscape:	720 x 400*1 : VGA	Some systems may not
		640 x 480*1 @ 60 Hz to 75 Hz	support all modes listed.
		800 x 600*1 @ 56 Hz to 75 Hz	
		832 x 624*1 @ 75 Hz	
		1024 x 768*1 @ 60 Hz to 75 Hz	
		1152 x 864*1 @ 70 Hz	
		1152 x 870*1 @ 75 Hz	
		1280 x 960*1 @ 60 Hz to 75 Hz	Recommended resolution is 60 Hz for
		1280 x 1024 @ 60 Hz to 75 Hz.....	optimal display performance.
Active Display Area	Horizontal:	337.9 mm	
	Vertical:	270.3 mm	
Speakers	Practical Audio Output:	1.0 W + 1.0 W	
Power Supply		100 - 240 V ~ 50/60 Hz	
Dimensions	Landscape:	368.0 mm (W) x 381.5 mm (H) x 205.0 mm (D) (with stand)	
		368.0 mm (W) x 325.5 mm (H) x 60.6 mm (D) (without stand)	
Weight		4.3 kg	
Environmental Considerations			
	Operating Temperature:	5 °C to 35 °C	
	Humidity:	30% to 80%	
	Altitude:	0 to 3,048 m	
	Storage Temperature:	-10 °C to +60 °C	
	Humidity:	10% to 85%	
	Altitude:	0 to 12,192 m	

*1 Interpolated Resolutions: When resolutions are shown that are lower than the pixel count of the LCD module, text may appear different. This is normal and necessary for all current flat panel technologies when displaying non-native resolutions full screen. In flat panel technologies, each dot on the screen is actually one pixel, so to expand resolutions to full screen, an interpolation of the resolution must be done.
*2 LCD Module at 25°C.

NOTE: Technical specifications are subject to change without notice.

Specifications AccuSync LCD93VM Monitor

Monitor Specifications		AccuSync LCD93VM Monitor	Notes
LCD Module	Diagonal:	48.3 cm/19 inches	Active matrix; thin film transistor (TFT) liquid crystal display (LCD); 0.294 mm dot pitch; 300 cd/m^2 white luminance, 800:1 contrast ratio, typical, response time: 5 ms.
	Viewable Image Size:	48.3 cm/19 inches	
	Native Resolution (Pixel Count):	1280 x 1024	
Input Signal	Video:	ANALOG 0.7 Vp-p/75 Ohms	
	Sync:	Separate sync.TTL Level (Positive/Negative) Horizontal sync. Positive/Negative Vertical sync. Positive/Negative	
Display Colours	Analog input:	16,7 M	Depends on display card used.
Synchronization Range	Horizontal:	31.5 kHz to 81.1 kHz	Automatically
	Vertical:	56 Hz to 76 Hz	Automatically
Viewing Angle	Left/Right:	-85°/+85° (CR>5)	
	Up/Down:	-85°/+85° (CR>5)	
Resolutions Supported	Landscape:	720 x 400*1 : VGA 640 x 480*1 @ 60 Hz to 75 Hz 800 x 600*1 @ 56 Hz to 75 Hz 832 x 624*1 @ 75 Hz 1024 x 768*1 @ 60 Hz to 75 Hz 1152 x 864*1 @ 70 Hz 1152 x 870*1 @ 75 Hz 1280 x 960*1 @ 75 Hz 1280 x 1024 @ 60 Hz to 75 Hz.....	Some systems may not support all modes listed. Recommended resolution is 60 Hz for optimal display performance.
Active Display Area	Horizontal:	376.3 mm	
	Vertical:	301.1 mm	
Speakers	Practical Audio Output:	1.0 W + 1.0 W	
Power Supply		100 - 240 V ~ 50/60 Hz	
Dimensions	Landscape:	405.5 mm (W) x 405.5 mm (H) x 205.0 mm (D) (with stand) 405.5 mm (W) x 354.5 mm (H) x 61.5 mm (D) (without stand)	
Weight		5.6 kg	
Environmental Considerations			
	Operating Temperature:	5 °C to 35 °C	
	Humidity:	30% to 80%	
	Altitude:	0 to 3,048 m	
	Storage Temperature:	-10 °C to +60 °C	
	Humidity:	10% to 85%	
	Altitude:	0 to 12,192 m	

*1 Interpolated Resolutions: When resolutions are shown that are lower than the pixel count of the LCD module, text may appear different. This is normal and necessary for all current flat panel technologies when displaying non-native resolutions full screen. In flat panel technologies, each dot on the screen is actually one pixel, so to expand resolutions to full screen, an interpolation of the resolution must be done.

NOTE: Technical specifications are subject to change without notice.

Features

Reduced Footprint: Provides the ideal solution for environments requiring superior image quality but with size and weight limitations. The small footprint and low weight allow it to be moved or transported easily from one location to another.

Colour Control Systems: Allows you to adjust the colours on your screen and customize the colour accuracy of your monitor to a variety of standards.

OSM (On-Screen Manager) Controls: Allow you to quickly and easily adjust all elements of your screen image via simple to use on-screen menus.

No-touch Auto Adjust: No-touch Auto Adjust automatically adjusts the monitor to optimal settings upon initial setup.

ErgoDesign Features: Enhance human ergonomics to improve the working environment, protect the health of the user and save money. Examples include OSM controls for quick and easy image adjustments, tilt base for preferred angle of vision, small footprint and compliance with MPRII and TCO guidelines for lower emissions.

Plug and Play: The Microsoft solution with the Windows operating system facilitates setup and installation by allowing the monitor to send its capabilities (such as screen size and resolutions supported) directly to your computer, automatically optimizing display performance.

IPM (Intelligent Power Manager) System: Provides innovative power-saving methods that allow the monitor to shift to a lower power consumption level when on but not in use, saving two-thirds of your monitor energy costs, reducing emissions and lowering the air conditioning costs of the workplace.

Multiple Frequency Technology: Automatically adjusts monitor to the display card's scanning frequency, thus displaying the resolution required.

FullScan Capability: Allows you to use the entire screen area in most resolutions, significantly expanding image size.

VESA Standard Mounting Interface: Allows users to connect their AccuSync monitor to any VESA standard third party mounting arm or bracket. Allows for the monitor to be mounted on a wall or an arm using any third party compliant device.

Troubleshooting

No picture

- The signal cable should be completely connected to the display card/computer.
- The display card should be completely seated in its slot.
- Check front power Switch and computer power switch should be in the ON position.
- Check to make sure that a supported mode has been selected on the display card or system being used. (Please consult display card or system manual to change graphics mode.)
- Check the monitor and your display card with respect to compatibility and recommended settings.
- Check the signal cable connector for bent or pushed-in pins.
- Check the signal input.

Power Button does not respond

- Unplug the power cord of the monitor from the AC outlet to turn off and reset the monitor.

Image persistence

- Image persistence is when a “ghost” of an image remains on the screen even after the monitor has been turned off. Unlike CRT monitors, LCD monitors’ image persistence is not permanent, but constant images being displayed for a long period of time should be avoided.
  To alleviate image persistence, turn the monitor off for as long as an image was displayed. For example, if an image was on the monitor for one hour and a residual image remains, the monitor should be turned off for one hour to erase the image.

NOTE: As with all personal display devices, NEC DISPLAY SOLUTIONS recommends using a screen saver at regular intervals whenever the screen is idle or turning off the monitor when not in use.

Image is unstable, unfocused or swimming is apparent

- Signal cable should be completely attached to the computer.
- Use the OSM Image Adjust controls to focus and adjust display by increasing or decreasing the fine total. When the display mode is changed, the OSM Image Adjust settings may need to be re-adjusted.
- Check the monitor and your display card with respect to compatibility and recommended signal timings.
- If your text is garbled, change the video mode to non-interlace and use 60 Hz refresh rate.

LED on monitor is not lit (no green or amber colour can be seen)

- Power Switch should be in the ON position and power cord should be connected.

Display image is not sized properly

- Use the OSM Image Adjust controls to increase or decrease the H.SIZE.
- Check to make sure that a supported mode has been selected on the display card or system being used. (Please consult display card or system manual to change graphics mode.)

No Video

- If no video is present on the screen, turn the Power button off and on again.
- Make certain the computer is not in a power-saving mode (touch the keyboard or mouse).

No Sound

- Check to see if speaker cable is properly connected.
- Check to see if mute is activated.
- Check to see if volume in OSM is set at minimum.

TCO Development

Congratulations!

The display you have just purchased carries the TCO'03 Displays label. This means that your display is designed, manufactured and tested according to some of the strictest quality and environmental requirements in the world. This makes for a high performance product, designed with the user in focus that also minimizes the impact on our natural environment.

Some of the features of the TCO'03 Display requirements:

Ergonomics

- Good visual ergonomics and image quality in order to improve the working environment for the user and to reduce sight and strain problems. Important parameters are luminance, contrast, resolution, reflectance, colour rendition and image stability.

Energy

- Energy-saving mode after a certain time – beneficial both for the user and the environment
- Electrical safety

Emissions

- Electromagnetic fields
- Noise emissions

Ecology

- The product must be prepared for recycling and the manufacturer must have a certified environmental management system such as EMAS or ISO 14 001.
- Restrictions on:
  - chlorinated and brominated flame retardants and polymers
  - heavy metals such as cadmium, mercury and lead.

The requirements included in this label have been developed by TCO Development in co-operation with scientists, experts, users as well as manufacturers all over the world. Since the end of the 1980s TCO has been involved in influencing the development of IT equipment in a more user-friendly direction. Our labelling system started with displays in 1992 and is now requested by users and IT-manufacturers all over the world.

For more information, please visit
www.tcodevelopment.com

Manufacturer's Recycling and Energy Information

NEC DISPLAY SOLUTIONS is strongly committed to environmental protection and sees recycling as one of the company's top priorities in trying to minimize the burden placed on the environment. We are engaged in developing environmentally-friendly products, and always strive to help define and comply with the latest independent standards from agencies such as ISO (International Organisation for Standardization) and TCO (Swedish Trades Union).

Disposing of your old NEC product

The aim of recycling is to gain an environmental benefit by means of re-use, upgrading, reconditioning or reclamation of material. Dedicated recycling sites ensure that environmentally harmful components are properly handled and securely disposed. To ensure the best recycling of our products, **NEC DISPLAY SOLUTIONS offers a variety of recycling procedures** and gives advice on how to handle the product in an environmentally sensitive way, once it has reached the end of its life.

All required information concerning the disposal of the product and country-specific information on recycling facilities can be found on our following websites:

http://www.nec-display-solutions.com/greencompany/ (in Europe),

http://www.nec-display.com (in Japan) or

http://www.necdisplay.com (in USA).

Energy Saving

This monitor features an advanced energy saving capability. When a VESA Display Power Management Signalling (DPMS) Standard signal is sent to the monitor, the Energy Saving mode is activated. The monitor enters a single Energy Saving mode.

LCD73VM

Mode	Power consumption	LED colour
Normal Operation	Approx. 39W	Green
Energy Saving Mode	Less than 2W	Amber
Off Mode	Less than 2W	Unlit

LCD93VM

Mode	Power consumption	LED colour
Normal Operation	Approx. 40W	Green
Energy Saving Mode	Less than 2W	Amber
Off Mode	Less than 2W	Unlit

WEEE Mark (European Directive 2002/96/EC)

Within the European Union

EU-wide legislation, as implemented in each Member State, requires that waste electrical and electronic products carrying the mark (left) must be disposed of separately from normal household waste. This includes monitors and electrical accessories, such as signal cables or power cords. When you need to dispose of your NEC display products, please follow the guidance of your local authority, or ask the shop where you purchased the product, or if applicable, follow any agreements made between yourself and NEC.

The mark on electrical and electronic products only applies to the current European Union Member States.

Outside the European Union

If you wish to dispose of used electrical and electronic products outside the European Union, please contact your local authority so as to comply with the correct disposal method.